HÄFELE

Sturzfutterwinkel GS DCL 94
Soffit fixing bracket GS DCL 94
Plaque de montage en équerre GS DCL 94
Escuadra para montaje en techo GS DCL 94
Angolare di supporto per architrave GS DCL 94

931.20.914
931.20.915

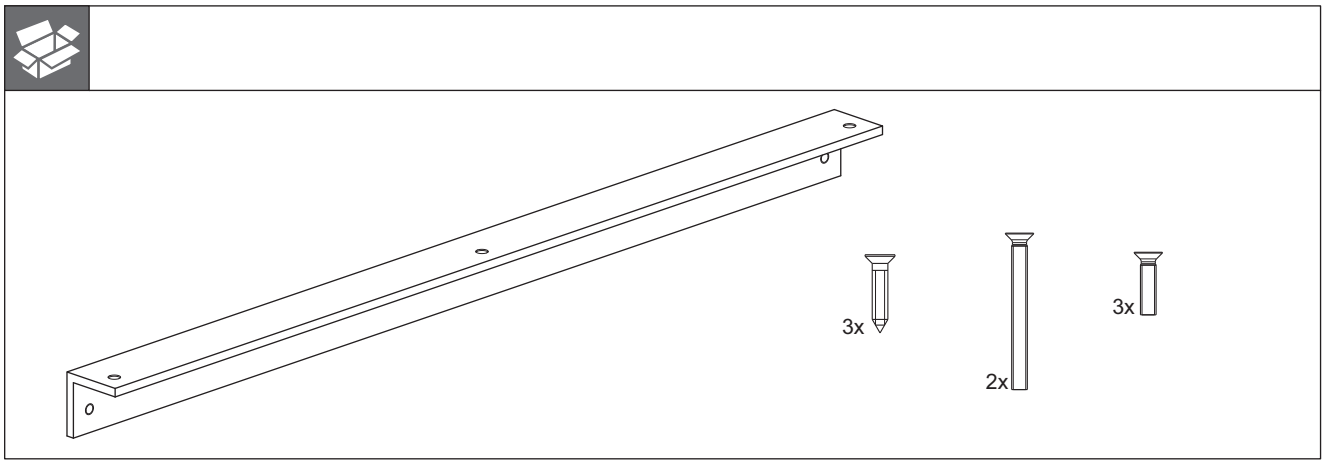

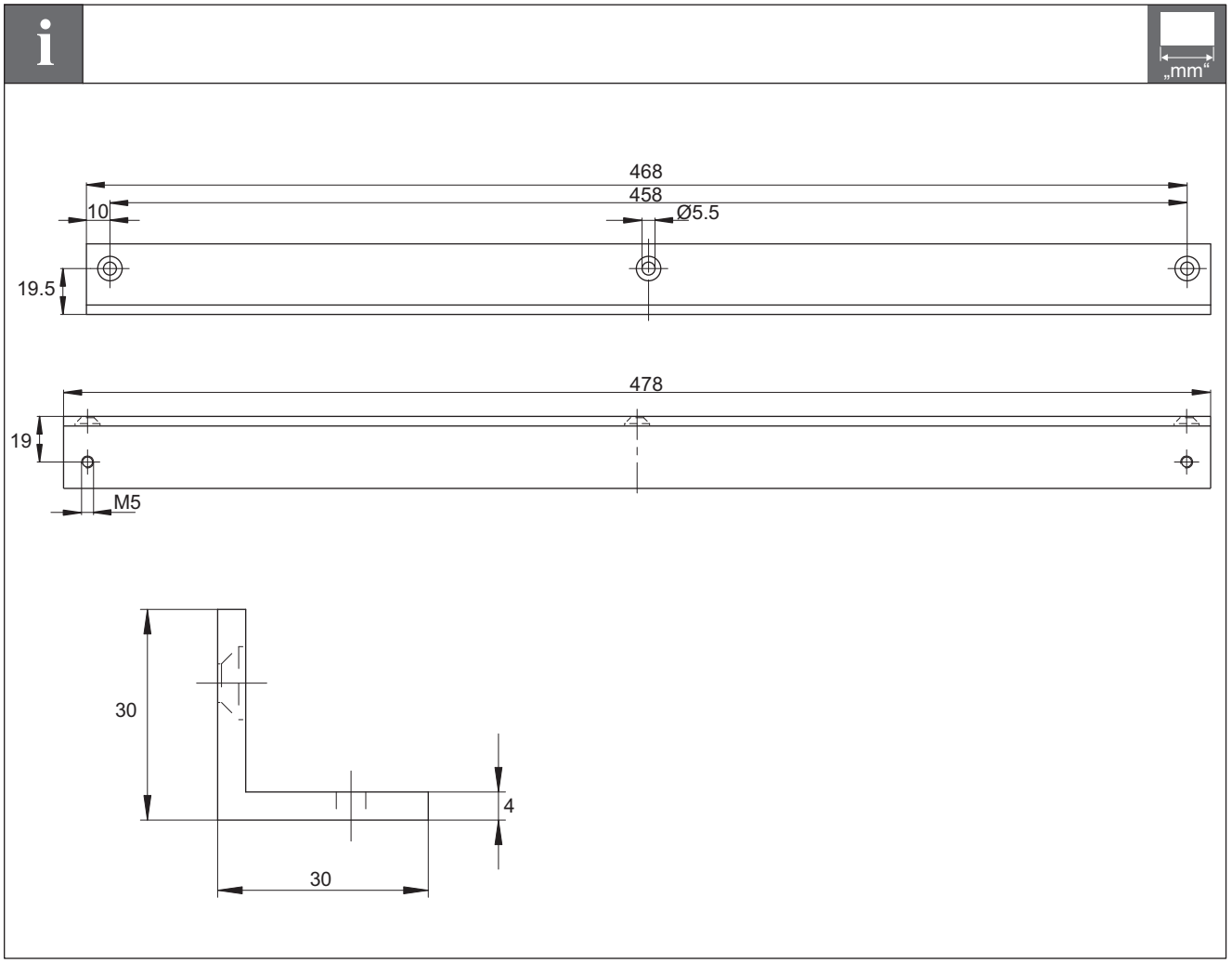

732.29.914

HDE 11/2015

i

„mm“

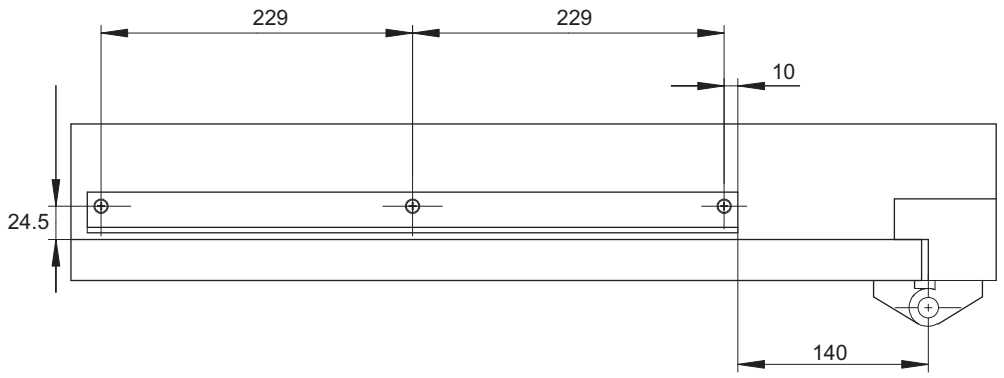

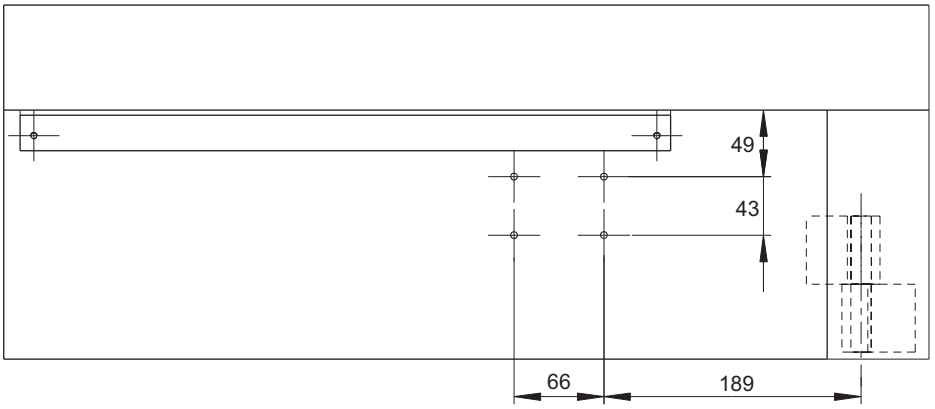

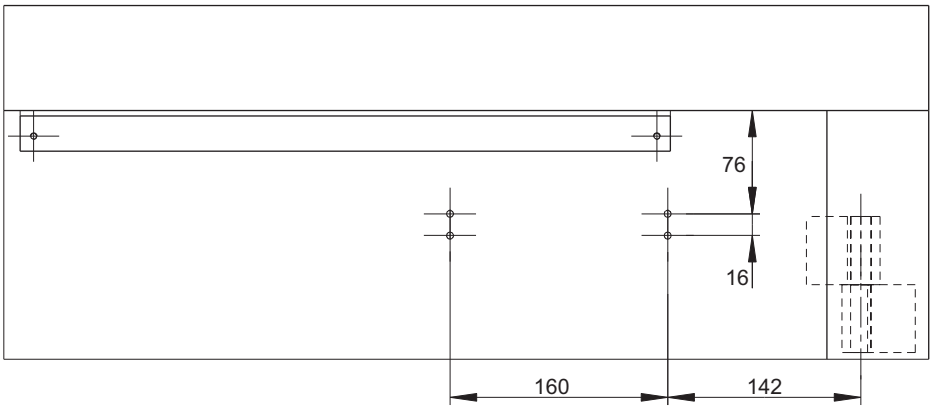

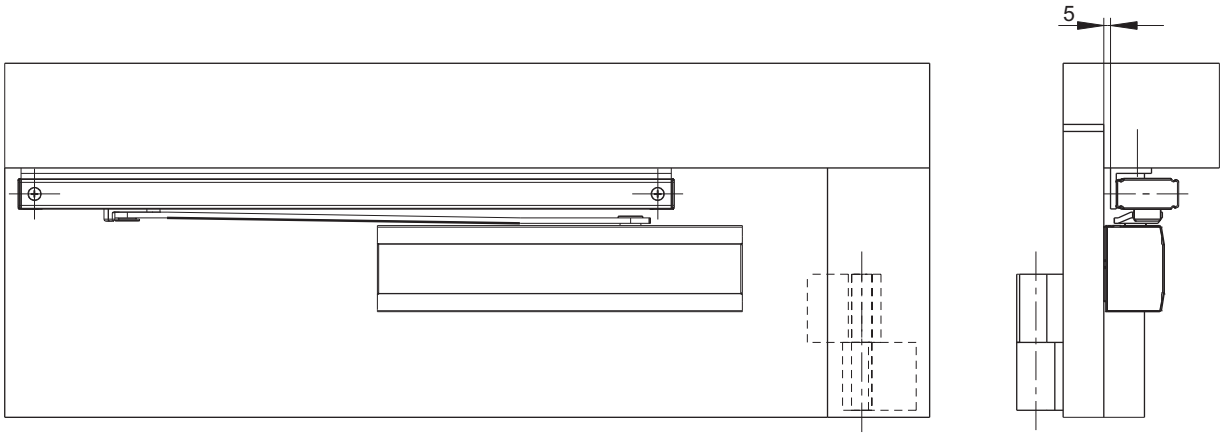

732.29.914

HDE 11/2015

1

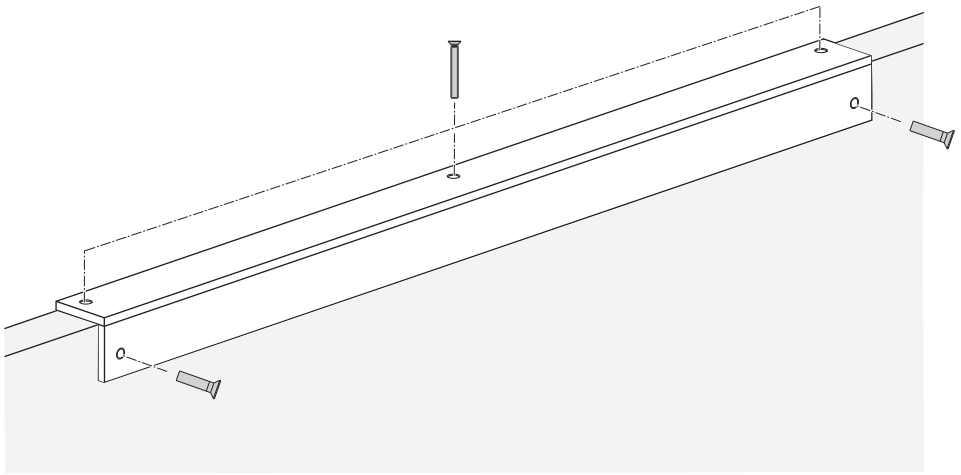

732.29.914

HDE 11/2015

Subject to
alterations

© 2015 by Häfele GmbH & Co KG
Adolf-Häfele-Str. 1 · D-72202 Nagold · www.hafele.com